© Copyright HD-Parts

102210

Cooling expansion reservoir

Vo ref.

23674076
22821826
22430043
21883433

Material: Plastic

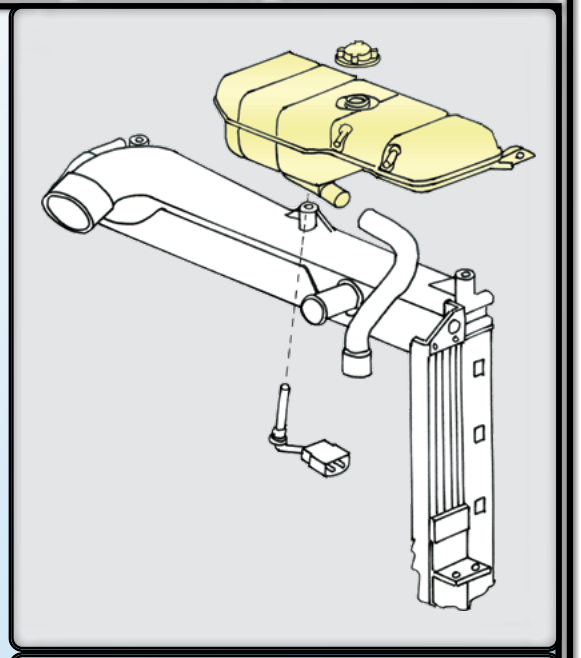

FH	12, 13	09/2005→
FH II (4)	13	01/2012→
FH	16	01/2003→
FH II (4)	16	05/2012→

B11	11		
B8R (3)	8	EUR 6	2013→
B11R (3)	11	EUR 6	2013→
B5LH (3)			2013→
B5LHC (3)			2013→
B5TL (3)			2014→

Expansion tank includes:

Vo ref.

21884469 Filler cap
21360115 Pressure cap
21271982 Sensors

kg 3,62