© Copyright HD-Parts

109214

Wheel hub stud 95 mm

Vo ref.

24075977
20515517

Grade: 10.9

Material: 40 Cr

Color: Dark grey

Finishing: Phosphate

Threads: M22 x 1,5 mm

Length without stud head: 95 mm

kg 0,38

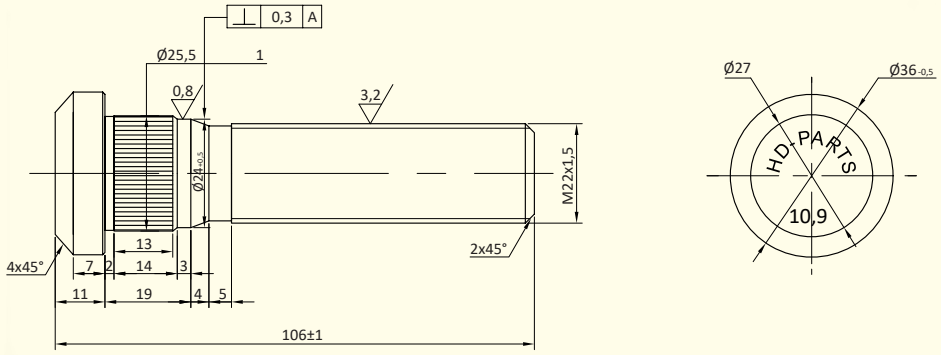

109215

Wheel hub stud 100 mm

Vo ref.

24075983
20515518

Grade: 10.9

Material: 40 Cr

Color: Dark grey

Finishing: Phosphate

Threads: M22 x 1,5 mm

Length without stud head: 100 mm
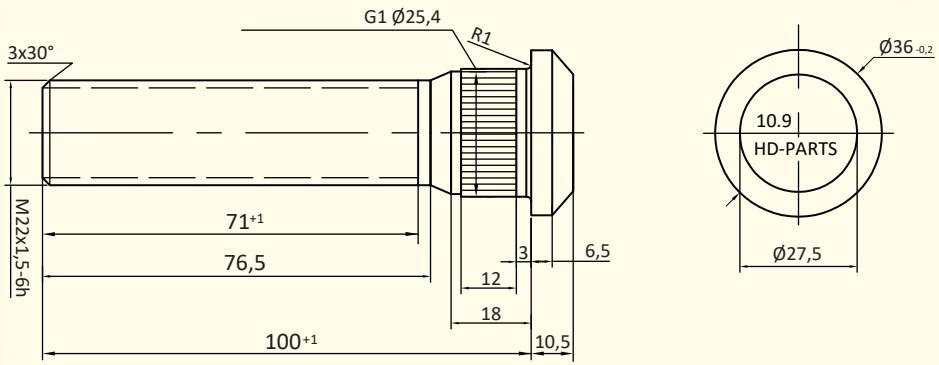
kg 0,37