110006

Bushing → Z-cam brakes

Vo ref.

1088812
1606179

Material:
CuPb10Sn10/SPHC
Alloy layer 0,3 mm

Outside diameter:
Ø 43,0 mm
+0,10 / +0,07 mm

Inside diameter:
Ø 38,2 mm

Width:
26,0 mm +0 / +0,3 mm

kg 0,06

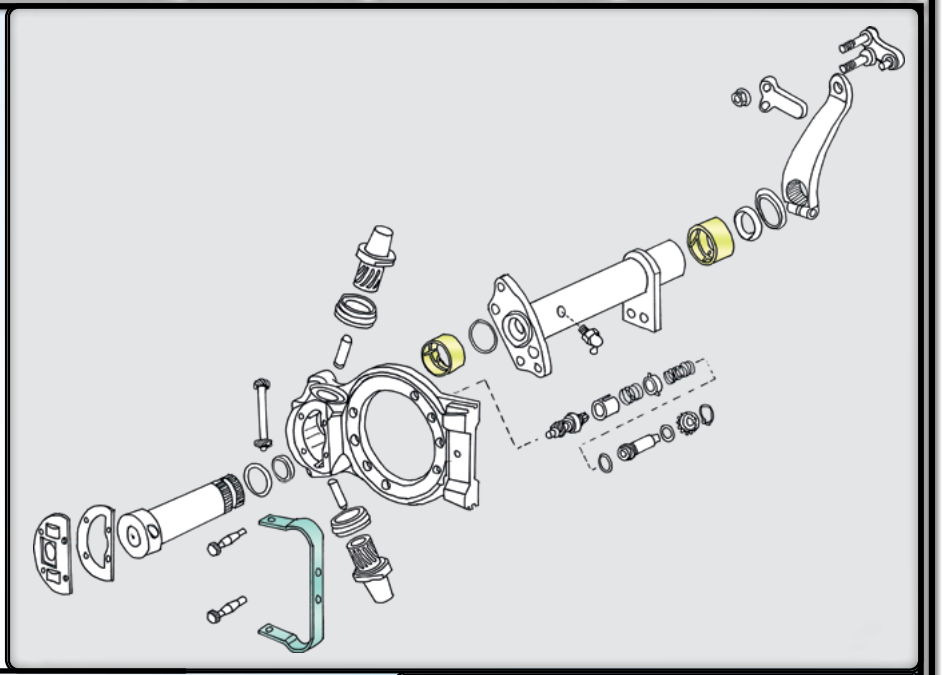

110025

Return spring

Vo ref.

3097092
1696444

Width: 25,5 mm
Thickness: 6,3 - 6,5 mm
Length: 224 mm +/- 4 mm

kg 0,74

FH (4)	09/2012→
FH	09/2005 - 09/2012
FH 12/16	1993 - 09/2005
FM (4)	09/2012→
FM	09/2005 - 09/2012
FM 9/12	01/2002 - 09/2005
FM 7/10/12	1998 - 01/2002
F 7/10/12	
FL 7/10/12	
FL 6	

B10, B12 with drum / Z - cam brakes