119460 118340

Support rod → mud guard

VoR

3162274	Steel
1077451	Aluminum
8154385	Aluminum

Clearance product !

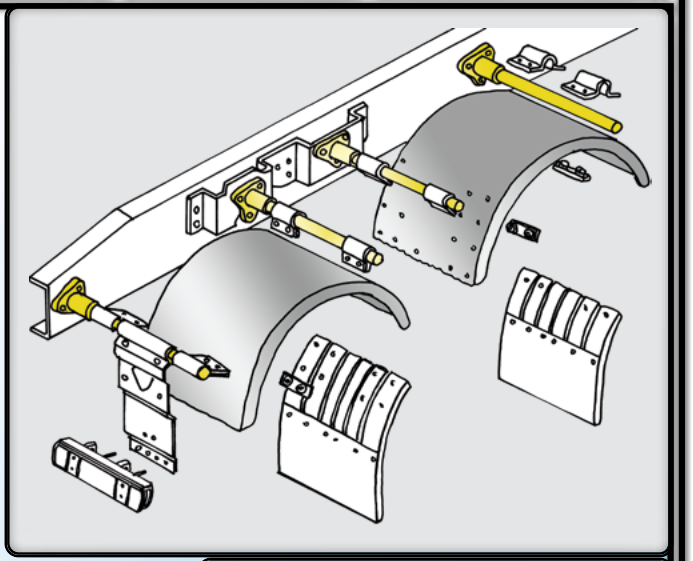

Reference numbers:

DT	**271182**	Aluminum
Sampa	**18300114**	Aluminum

FH	09/2005 - 09/2012
FH 12/16	1995 - 09/2005
FM	09/2005 - 09/2012
FM 9/12	09/2003 - 09/2005
FM 7/10/12	1998 - 09/2003

Material:
- Steel
- Cast iron

kg 5,7

All reference numbers are for referencing purposes only and must not be mentioned in invoices to the vehicle owners.