© Copyright HD-Parts

311058

Transverse beam 3rd.
→ Ch. F957, F958

Sc ref.

2898851
2008939

Material:
Painted steel
SAE 1006/1008

Length: 747,5 mm

kg 16

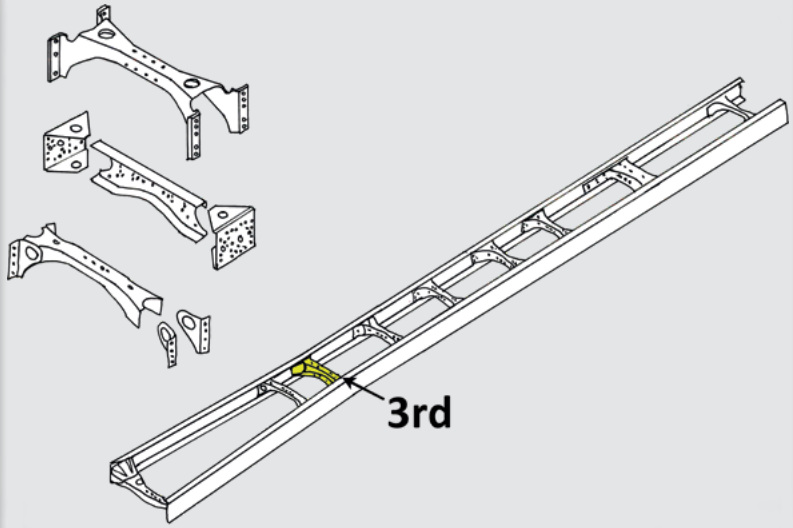

Fits inter alia

LPGRS	08/2016 →
GPR	2004 - 2018
	F957, F958

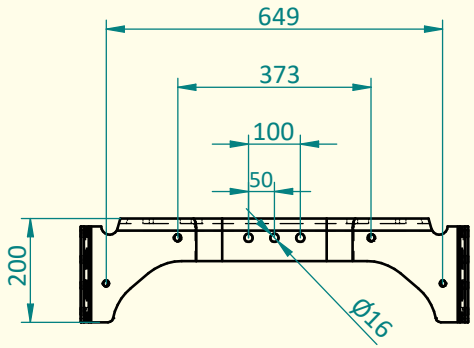

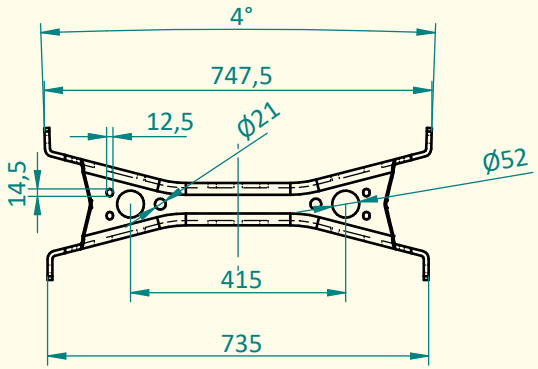

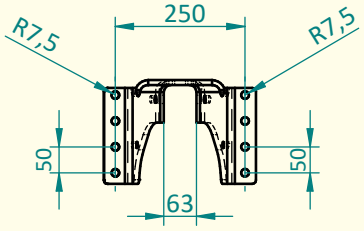

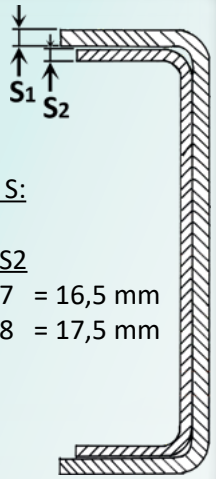

Double beam S:

	S1	S2	
F957	9,5	7	= 16,5 mm
F958	9,5	8	= 17,5 mm

Customs Taric code 8708 99 97 25 iron support w/ inst. holes