© Copyright HD-Parts

311066

Transverse beam 8 + 9 th.
→ Ch. F700, F800, F950

Sc ref. **1850645**

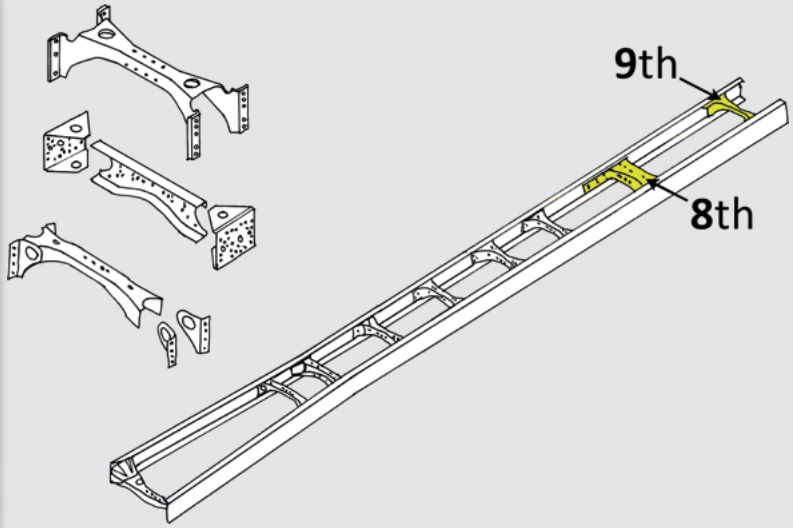

Material:
Painted steel
SAE 1006/1008

Length: 752 mm

kg 15,8

Fits inter alia

LPGRS	08/2016 →
GPR	2004 - 2018
	F700, F800, F950

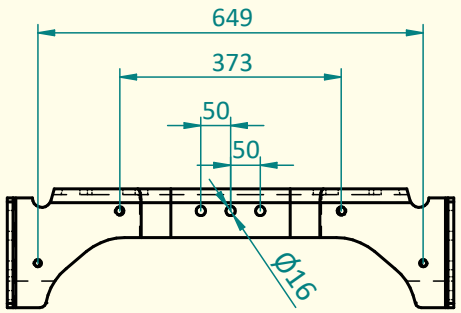

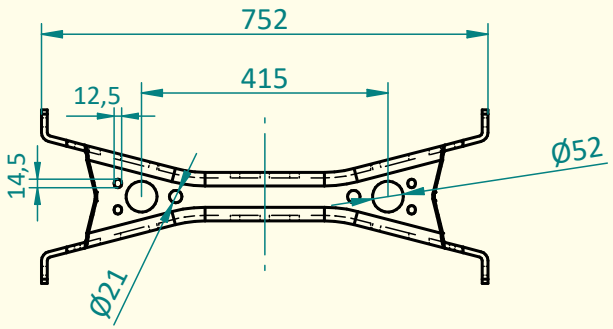

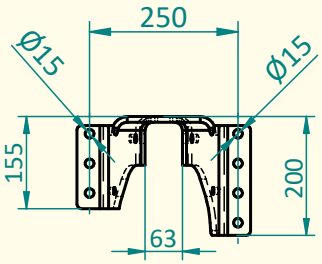

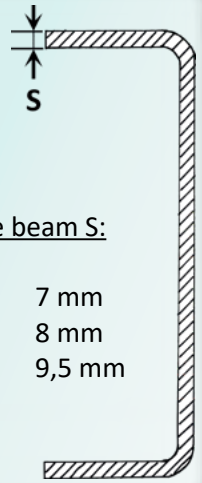

Single beam S:

F 700	7 mm
F 800	8 mm
F 950	9,5 mm

Customs Taric code 8708 99 97 25 iron support w/ inst. holes