311224

Bracket → Front grille panel, left

Sc ref.

Material: Painted steel

2341927
1733884

kg 0,21

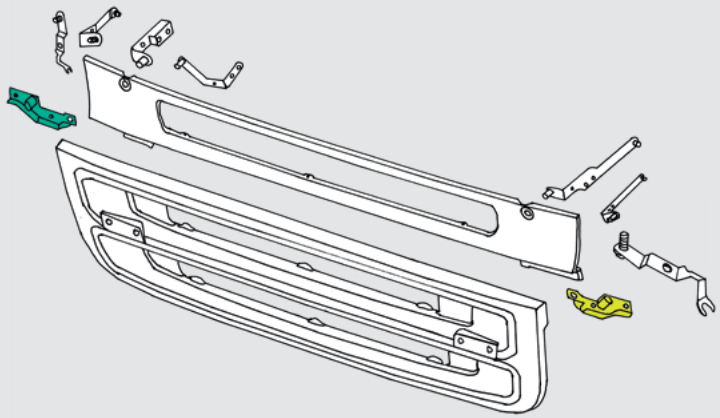

311225

Bracket → Front grille panel, right

Sc ref.

Material: Painted steel

2341929
1733885

kg 0,21

Chassis width 1020 mm

GPR
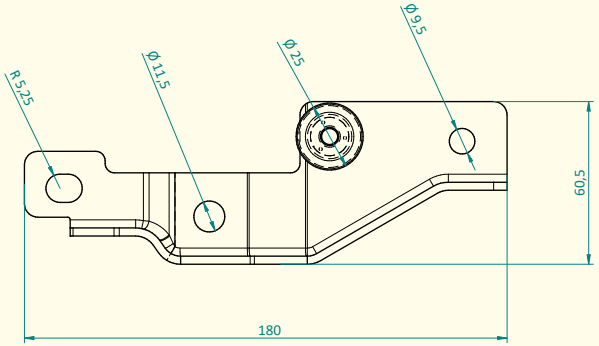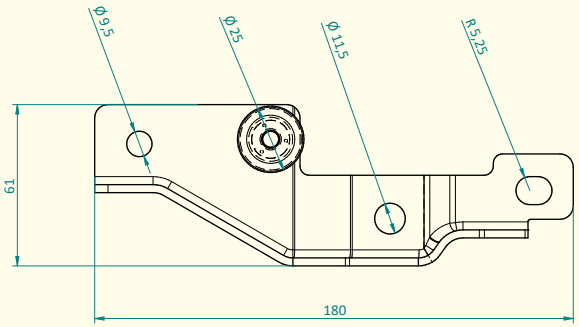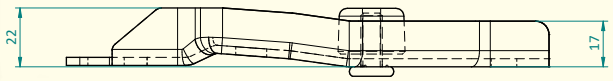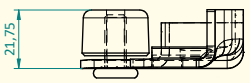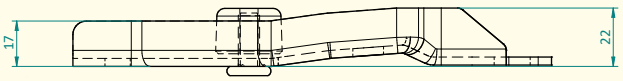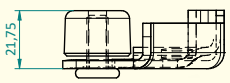
2004 → 2018