© Copyright HD-Parts

312418

Bump stop → 1. + 2. front axle

Sc ref. **2326006**

Materials:
- 3 mm steel
- NBR Rubber
Shore A75-80

kg 0,24

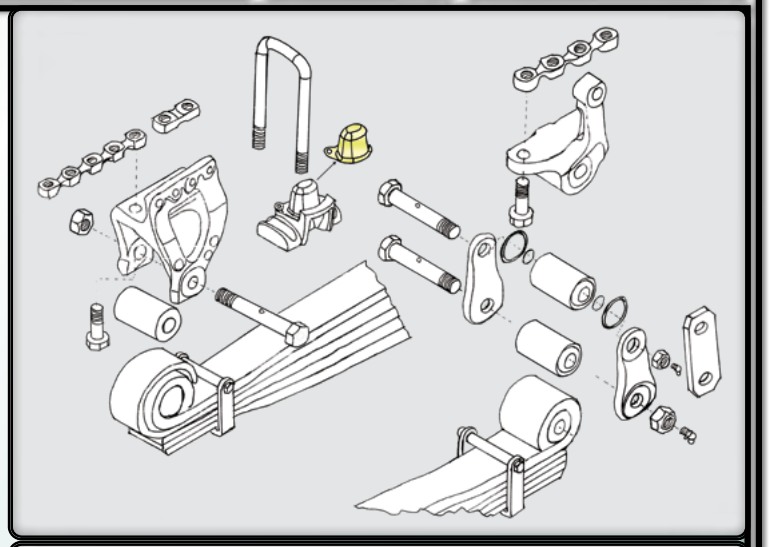

2 →

LPGRS 08/2016 →

Suit → Scr 2326004 clamp pad

Alternative:
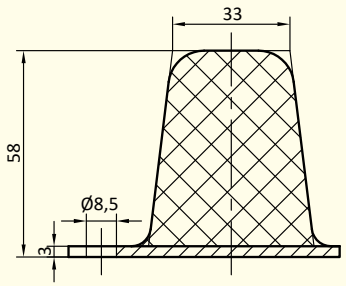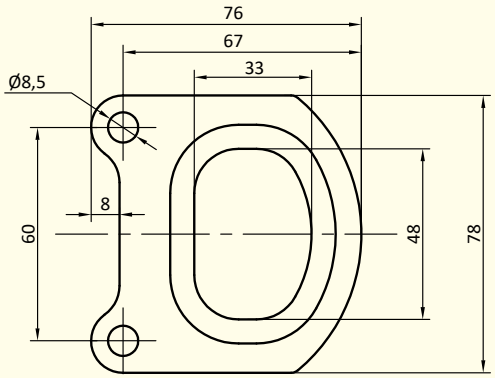
Scr 2751762	LH clamp pad
Scr 2751763	RH clamp pad
Scr 2643819	Bump stop