318040

Bracket
→ Heatshield, compact silencer
→ Mudguard housing, front, right

Sc ref. **1543041**

Material:
Painted steel

kg 0,91

GPR 04/2004 - 2018

Heatshield, compact silencer

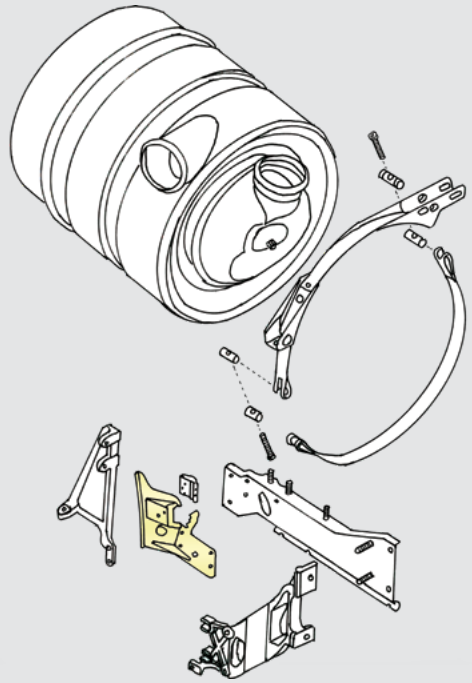

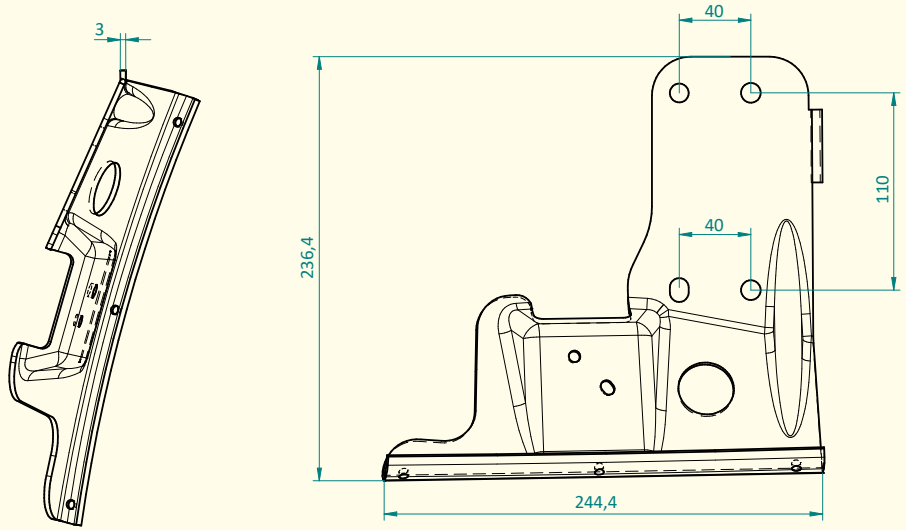
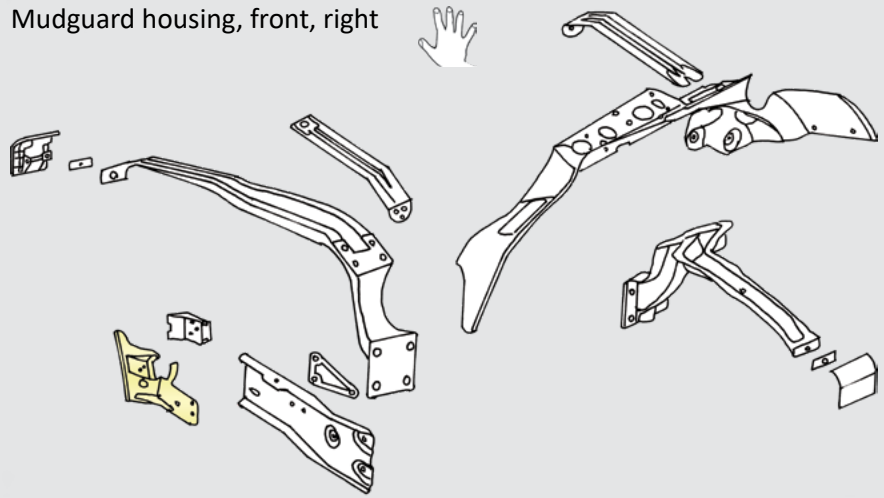
Mudguard housing, front, right