© Copyright HD-Parts

318225

Transferer RH → window conveyor LH 6-pol
Window winder type = Advanced

Sc ref. **2076265**

Material:
Plastic / Metal

Voltage: 24 VDC

kg 0,63

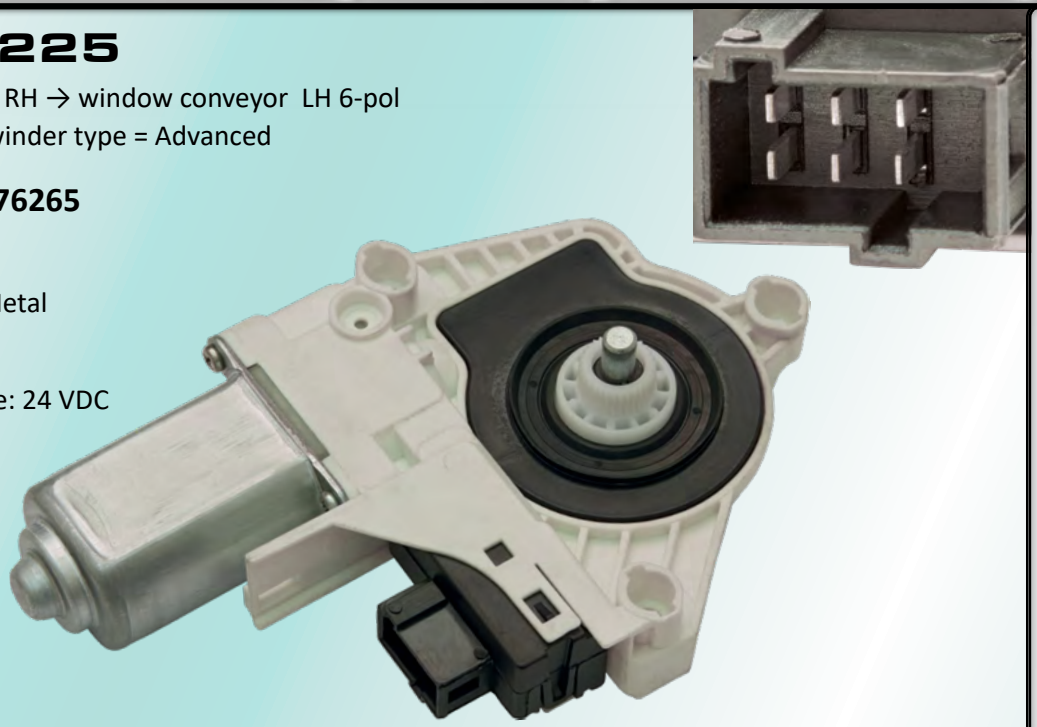

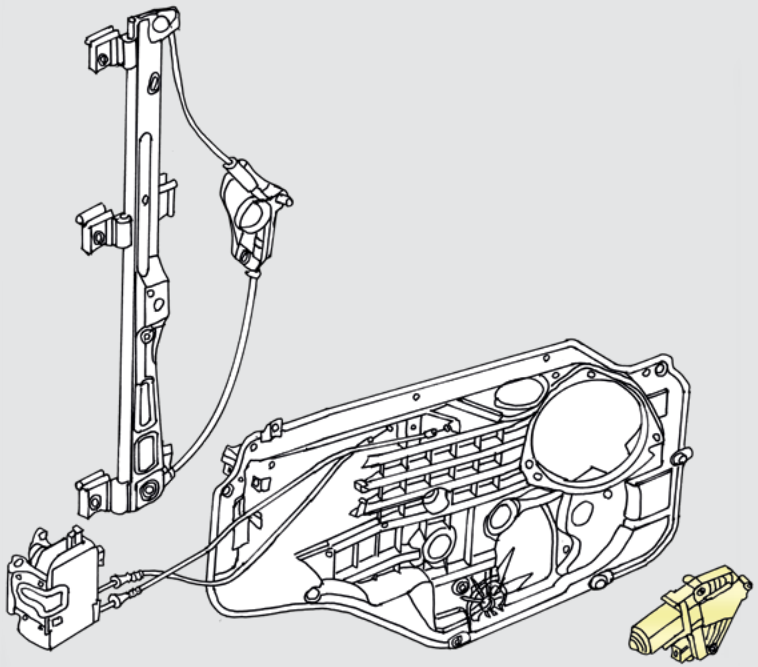

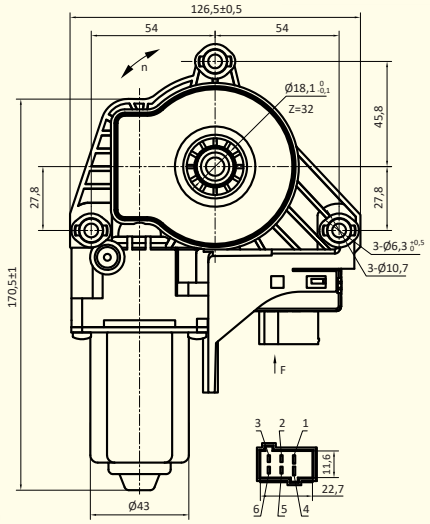

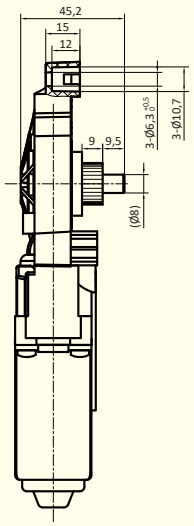

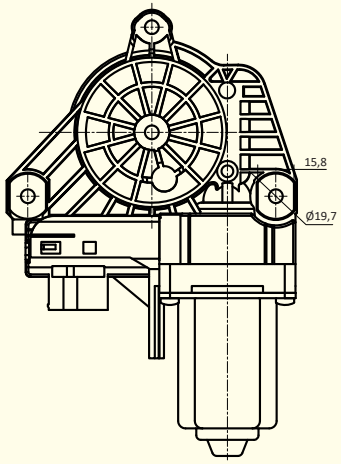

LPGRS

08/2016 →

LHD

RHD