319454

Mudguard bracket

Sc ref. **1794657**

Material:

Steel sheet
Thickness: 1,7 mm

Tube: Ø 60 mm
Tube wall: 5 mm

kg 7,9

→ 319455

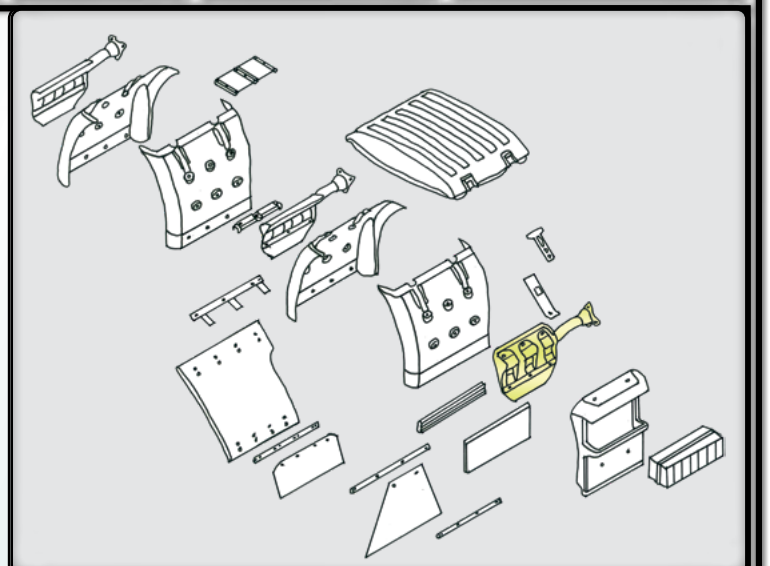

GPR	04/2004 - 2018
94 - 164	06/1995 - 12/2004

6 x 2, 6 x 2*4, 6 x 4
8 x 2, 8 x 2*6, 8 x 4

4 x 2, 4 x 4